Any unauthorized use of this drawing, copying or passing on to third parties requires the explicit approval of ebm-papst Mulfingen GmbH & Co. KG
Any violations of this shall be prosecuted in Civic and Penal Court!

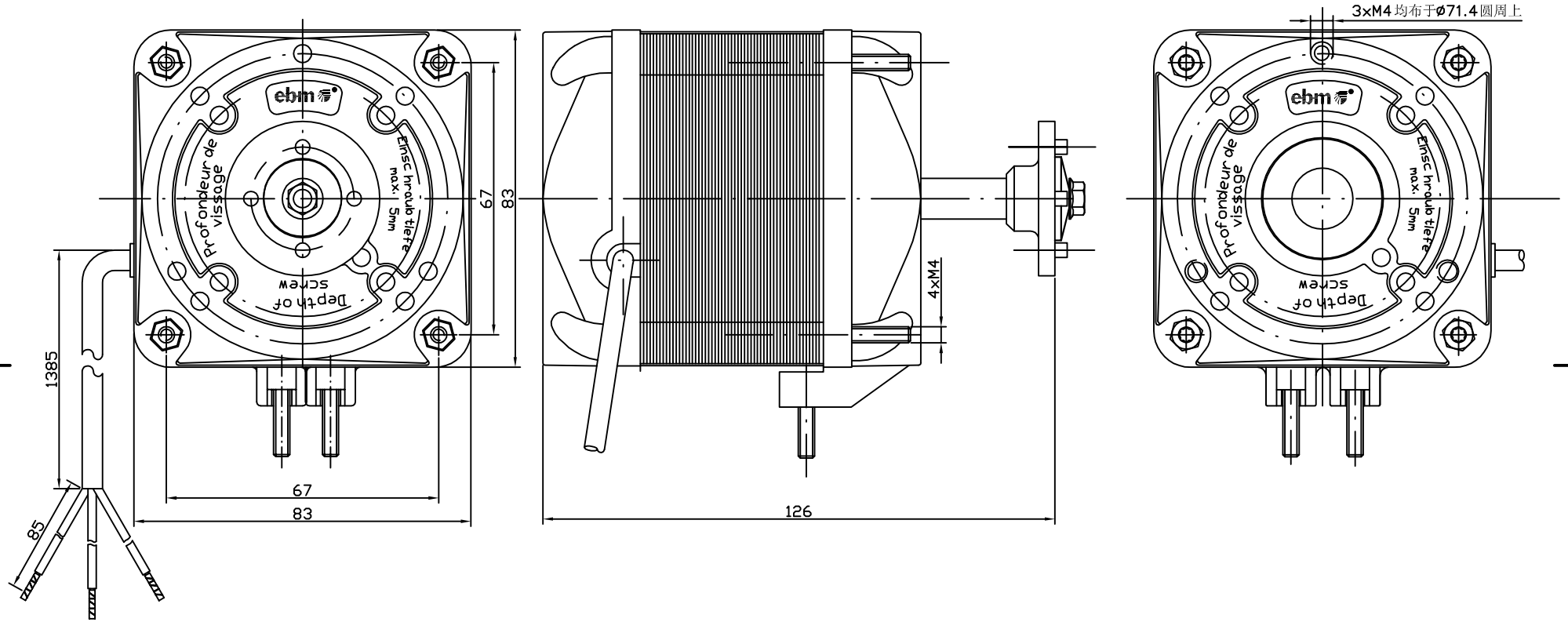

技术说明:

1. 230V,50/60Hz,34W.

Tolerances ISO 2768 -mK -E	ebmpapst						
	ebm-papst Ventilator (ShangHai) CO.,Ltd						
Scale 1:1	spec					Fit	Deviations
Size	M4Q045-EF01-A4/C01		Date	Name			
Distribution		Designed					
		Checked					
		CAD: M4Q045-EF01-A4-C01			Ind. KM-Nr.	Date	Name
						Sheet 1 of 1	

Paper size: A3