Any unauthorized use of this drawing, copying or passing on to third parties requires the explicit approval of ebm-papst Mulfingen GmbH & Co. KG
Any violations of this shall be prosecuted in Civil and Penal Court!

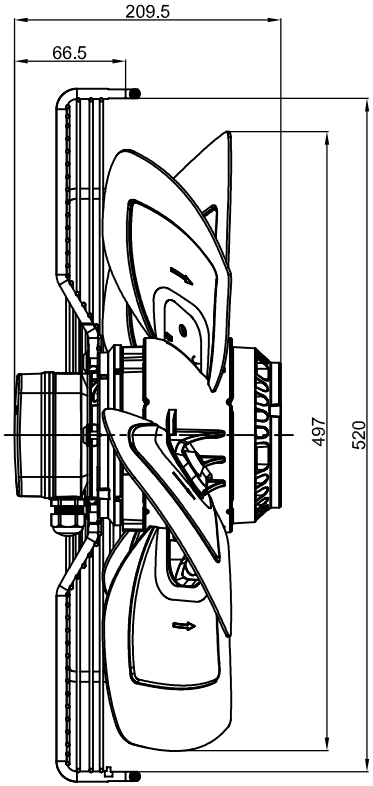

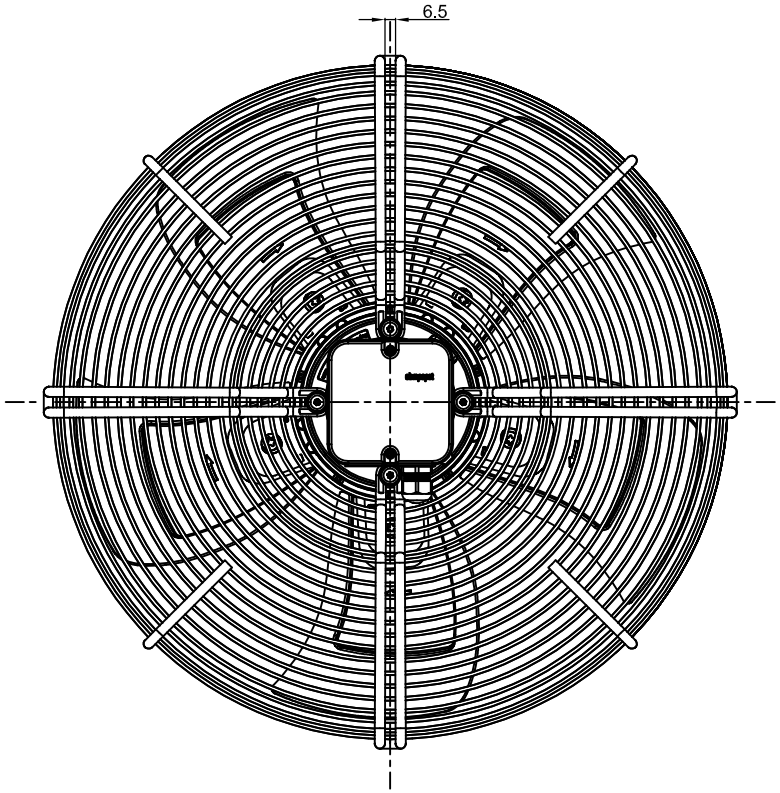

Technical data:

3~400V, D, 50Hz, 1325rpm, 820W, 1.59A
3~400V, Y, 50Hz, 1035rpm, 550W, 0.95A
3~480V, D, 60Hz, 1570rpm, 1220W, 1.86A
3~480V, D, 60Hz, 1170rpm, 770W, 1.13A
approval: CCC

Tolerances	ebmpapst ebm-papst Ventilator (ShangHai) CO.,Ltd							
Scale							Fit	Deviations
Size	S4D500-CD03-01/F01		Date	Name				
Distribution		Designed						
		Checked						
		CAD: S4D500-CD03-01_F01			Ind.	KM-Nr.	Date	Name
							Sheet	of

Paper size: A3