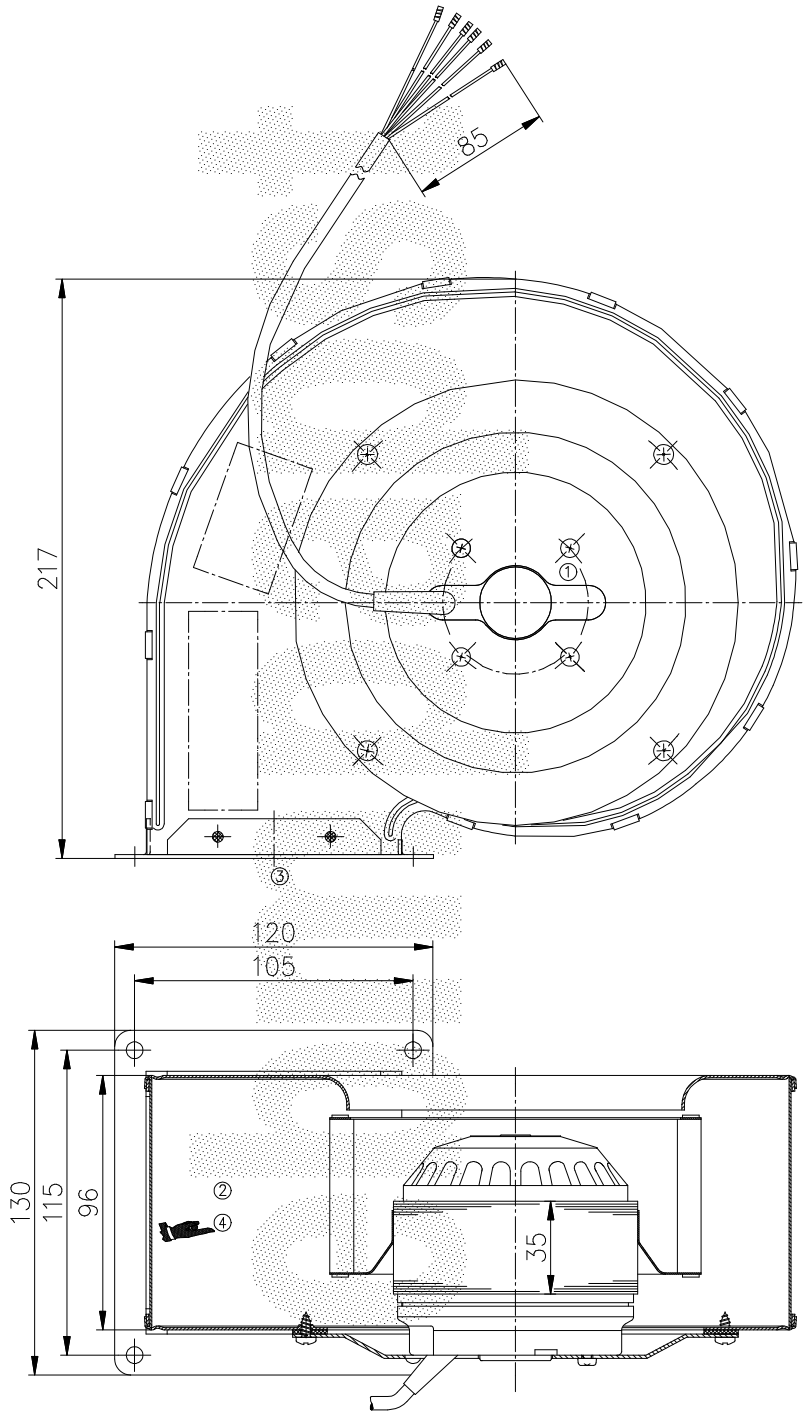

ebmpapst

ebm-papst Mulfingen GmbH & Co. KG

Delivery Specification

No. LV 10198

Unit: Centrifugal blower single inlet

Type: G2E140–PI51–11

Motor: single phase motor with capacitor

Customer: Ziehl– EBM OY

Motor Type: M2E068–DF..–..

Type	voltage V	fre-quency Hz	power consumption W	power output W	current consumption A	air volume m³/h	static pressure Pa	speed RPM			noise level dBA	capacitor µF	capacitor VDB
G2E140–PI51–11	230	50	180		0,78	560	0	2200			68	4	450
	230	60	225		0,97	545	0	2160			67	4	450

Winding layout No.: 1208 Resistance: 47,5/ 68,5 Ω ③

Insulation class: B

Operating type:

Permissible ambient temperature: 65/45°C

△t= 55/75K at 60/50 Hz + 0 Pa

Motor protection: thermocontact

Data plate: stamped

Type: G2E140–PI51–11

230 V 50/60 Hz 180/225 W 0,78/0,97A– 2200/2160 RPM 4 µF 450 VDB

High–voltage test according to VDE 0700 with

Electrical connection: cable PVC 6G 0,5; 450 mm from housing, 85 mm dismantled, 6x brass lead tip AMP 926933–2;

Material/surface treatment: stator moisture protected, rotor black varnished with condensed water bores, impeller and housing sendzimir galvanised

Bearings: ball bearing

Direction of rotation: left hand direction

Looking at rotor side:

Airflow direction:

Balancing grade: fan balanced dynamically in two planes

Protection class: IP 44 in accordance with DIN 40 050

Mounting position: any

Approx. weight per unit: kg

Wiring diagrams:

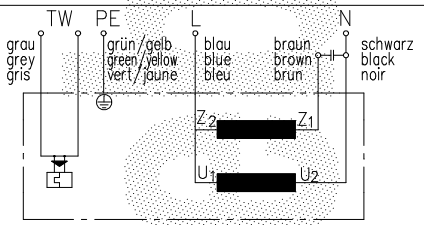

3	48806	05.11.03	rb														
2	45947	23.10.02	MV														
1	43966	12.03.02	MSt														
–	–	24.10.00	HG			4	61821	13.11.07	KFI								

Copying of this document, and giving it to others and the use or communication of the contents there of, are forbidden whithout express authority. Offenders are liable to the payment of damages. All rights are reserved in the event of the grant of a patent or the registration of a utility model or design.

CAD: 0015114
DISTRUBUTION: G2

AutoCAD